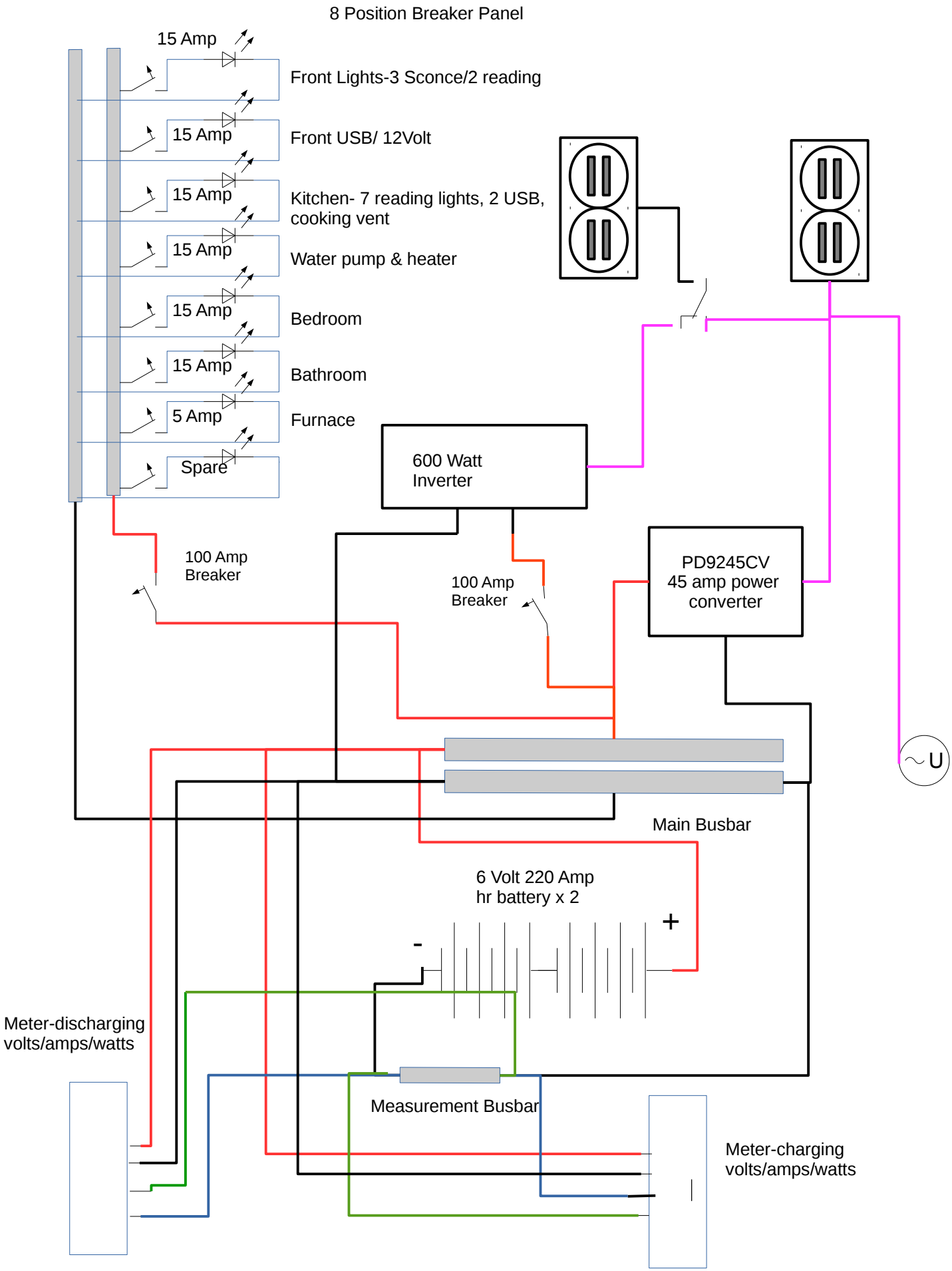
8 Position Breaker Panel
15 Amp
Front Lights-3 Sconce/2 reading
15 Amp
Front USB/ 12Volt
15 Amp
Kitchen- 7 reading lights, 2 USB, cooking vent
15 Amp
Water pump & heater
15 Amp
Bedroom
15 Amp
Bathroom
5 Amp
Furnace
Spare
600 Watt Inverter
100 Amp Breaker
100 Amp Breaker
PD9245CV 45 amp power converter
~U
Main Busbar
6 Volt 220 Amp hr battery x 2
-
+
Meter-discharging volts/amps/watts
Measurement Busbar
Meter-charging volts/amps/watts